Global LCD Panel Exchange Center www.panelook.com 屏库:全球液晶屏交易中心

SPECIFICATION
FOR
APPROVAL

(●) **Preliminary Specification**
( ) **Final Specification**

Title	24.0" WUXGA TFT LCD

BUYER	General
MODEL	

SUPPLIER	LG Display Co., Ltd.
*MODEL	LM240WU9
SUFFIX	SLA1

*When you obtain standard approval,
please use the above model name without suffix

APPROVED BY	SIGNATURE DATE
/	
/	
/	

Please return 1 copy for your confirmation with your signature and comments.

APPROVED BY	SIGNATURE DATE
B. C. Kim / G. Manager	
REVIEWED BY	
S. H . Kim / Manager [C]	
Y. H. Hwang / Manager [M]	
M. S. Kang / Manager [P]	
S. H. Han / Manager [O]	
REPARED BY	
J. H. Oh / Engineer	

IT/Mobile Development Division 1
LG Display Co., Ltd

One step solution for LCD / PDP / OLED panel application: Datasheet, inventory and accessory! www.panelook.com

Global LCD Panel Exchange Center www.panelook.com 屏库:全球液晶屏交易中心

Contents

No	ITEM	Page
	COVER	1
	CONTENTS	2
	RECORD OF REVISIONS	3
1	GENERAL DESCRIPTION	4
2	ABSOLUTE MAXIMUM RATINGS	5
3	ELECTRICAL SPECIFICATIONS	6
3-1	ELECTRICAL CHARACTREISTICS	6
3-2	INTERFACE CONNECTIONS	8
3-3	SIGNAL TIMING SPECIFICATIONS	13
3-4	SIGNAL TIMING WAVEFORMS	14
3-5	COLOR INPUT DATA REFERNECE	15
3-6	POWER SEQUENCE	16
3-7	POWER SEQUENCE FOR INVERTER	17
4	OPTICAL SFECIFICATIONS	18
5	MECHANICAL CHARACTERISTICS	24
6	RELIABLITY	27
7	INTERNATIONAL STANDARDS	28
7-1	SAFETY	28
7-2	EMC	28
7-3	ENVIRONMENT	28
8	PACKING	29
8-1	DESIGNATION OF LOT MARK	29
8-2	PACKING FORM	30
8-3	PALLET FORM	31
9	PRECAUTIONS	32

One step solution for LCD / PDP / OLED panel application: Datasheet, inventory and accessory! www.panelook.com

Global LCD Panel Exchange Center www.panelook.com 屏库:全球液晶屏交易中心

RECORD OF REVISIONS

Revision No	Revision Date	Page	Description
0.0	Sep. 28. 2012	-	First Draft(Preliminary)

www.panelook.com

One step solution for LCD / PDP / OLED panel application: Datasheet, inventory and accessory! www.panelook.com

Global LCD Panel Exchange Center www.panelook.com 屏库:全球液晶屏交易中心

1. General Description

LM240WU9 is a Color Active Matrix Liquid Crystal Display with Light Emitting Diode (GB LED) backlight system without LED Driver. The matrix employs a-Si Thin Film Transistor as the active element. It is a transmissive type display operating in the normally black mode. It has a 24inch diagonally measured active display area with WUXGA resolution (1200 vertical by 1920 horizontal pixel array) Each pixel is divided into Red, Green and Blue sub-pixels or dots which are arranged in vertical stripes. Gray scale or the brightness of the sub-pixel color is determined with a 10-bit gray scale signal for each dot, thus, presenting a palette of more than 1.07B colors with Advanced-FRC (Frame Rate Control). It has been designed to apply the 10Bit 2 port LVDS interface. It is intended to support displays where high brightness, super wide viewing angle, high color saturation, and high color are important.

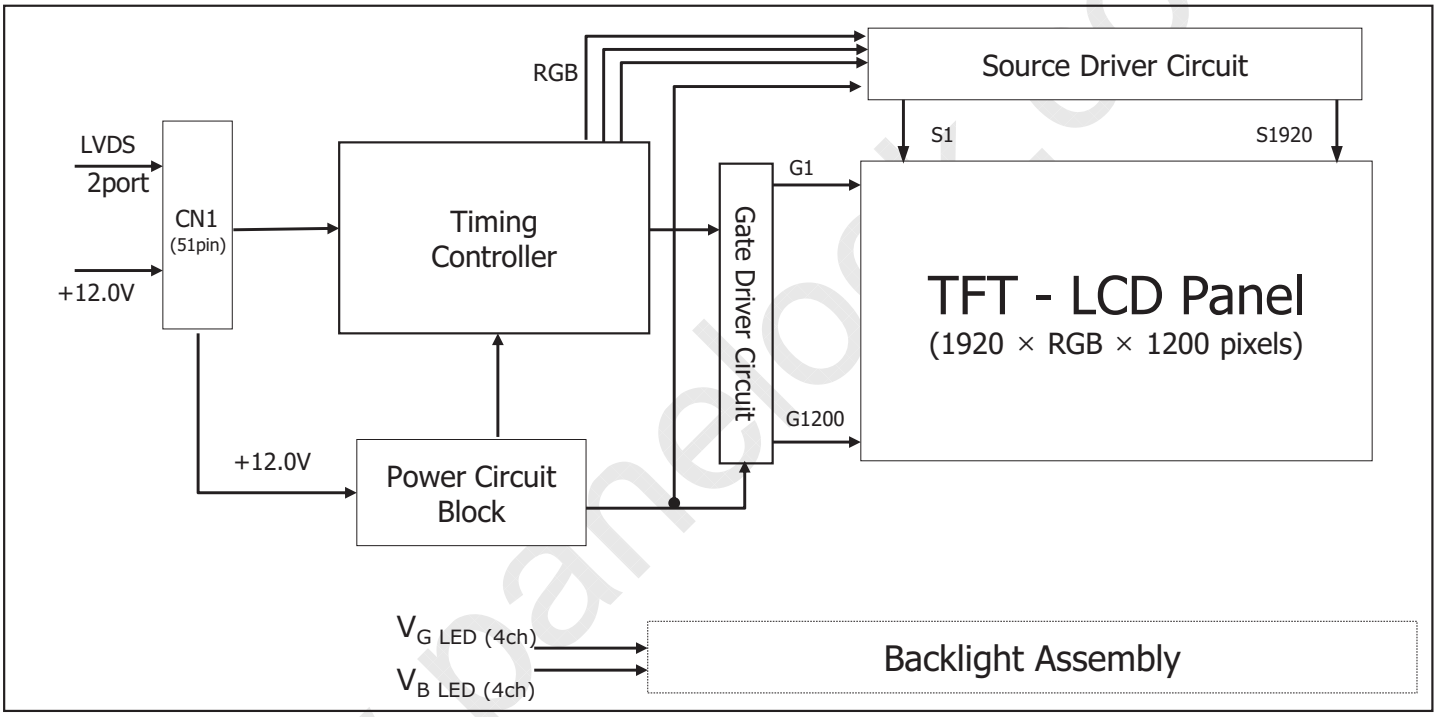

General Features

Active Screen Size	24.1 inches (61.13 cm) diagonal
Outline Dimension	546.4(H) x 352.0(V) x 15.5(D) mm (Typ.)
Pixel Pitch	0.270 mm x 0.270 mm
Pixel Format	1920 horiz. By 1200 vert. Pixels RGB stripes arrangement
Color Depth	8-bit + A-FRC, 1,073,741,824 colors
Luminance, White	350 cd/m^2 (Center 1 points)
Viewing Angle(CR>10)	View Angle Free (R/L 178(Typ.), U/D 178(Typ.))
Power Consumption	Total 36.96 Watt (Typ.) (6.36 Watt @V_{LCD}, 30.6 Watt@V_{DDB})
Weight	2450 g (typ.)
Display Operating Mode	Transmissive mode, normally black
Surface Treatment	Hard coating(3H), Anti-glare treatment of the front polarizer

One step solution for LCD / PDP / OLED panel application: Datasheet, inventory and accessory! www.panelook.com

Global LCD Panel Exchange Center www.panelook.com 屏库:全球液晶屏交易中心

2. Absolute Maximum Ratings

The following are maximum values which, if exceeded, may cause faulty operation or damage to the unit.

Table 1. ABSOLUTE MAXIMUM RATINGS

Parameter	Symbol	Values		Units	Notes
		Min	Max		
Power Input Voltage	V_{LCD}	8	14	Vdc	at 25 ± 2°C
Operating Temperature	T_{OP}	0	50	°C	1, 2, 3
Storage Temperature	T_{ST}	-20	60	°C	
Operating Ambient Humidity	H_{OP}	10	90	%RH	
Storage Humidity	H_{ST}	10	90	%RH	
LCM Surface Temperature	$T_{Surface}$	0	65	℃	1, 4

Note : 1. Temperature and relative humidity range are shown in the figure below.
Wet bulb temperature should be 39 °C Max, and no condensation of water.
Note : 2. Maximum Storage Humidity is up to 40℃, 70% RH only for 4 corner light leakage Mura.
Note : 3. Storage condition is guaranteed under packing condition.
Note : 4. LCM surface temperature should be Min 0℃ and Max 65℃ under the VLCD=12.0V.
fV=60Hz, 25℃ ambient temperature no humidity control and LED string current is typical value.

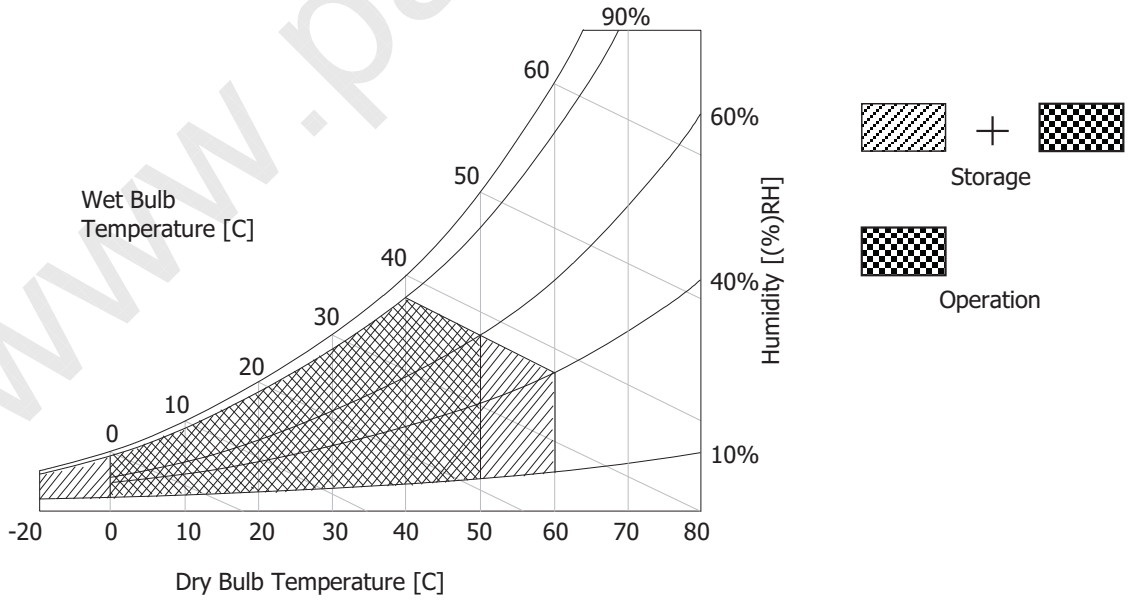

One step solution for LCD / PDP / OLED panel application: Datasheet, inventory and accessory! www.panelook.com

Global LCD Panel Exchange Center www.panelook.com 屏库:全球液晶屏交易中心

3. Electrical Specifications

3-1. Electrical Characteristics

It requires two power inputs. One is employed to power the LCD electronics and to drive the TFT array and liquid crystal. The second input power for the LED/Backlight, is typically generated by LED Driver. The LED Driver is an external unit to the LCDs.

Table 2-1. ELECTRICAL CHARACTERISTICS

Parameter	Symbol	Values			Unit	Notes
		Min	Typ	Max		
MODULE :						
Power Supply Input Voltage	V_{LCD}	11.4	12.0	12.6	Vdc	
Permissive Power Input Ripple	V_{RF}			(400)	mV_{p-p}	1
Power Supply Input Current	I_{LCD}	-	(531)	(610)	mA	2
		-	(714)	(822)	mA	3
Power Consumption	$P_{LCD\ TYP}$	-	(6.36)	(7.32)	Watt	2
	$P_{LCD\ MAX}$	-	(8.57)	(9.85)	Watt	2
Rush current	I_{RUSH}	-	-	3.0	A	4

Note :
1. Permissive power ripple should be measured under V_{LCD}=12.0V, 25 ± 2°C,f_V=60Hz condition and At that time, we recommend the bandwidth configuration of oscilloscope is to be under 20Mhz.
2. The specified current and power consumption are under the V_{LCD}=12.0V, 25 ± 2°C,f_V=60Hz condition whereas mosaic pattern(8 x 6) is displayed and f_V is the frame frequency.
3. The current is specified at the maximum current pattern.
4. The duration of rush current is about 2ms and rising time of power Input is 1ms(min.).

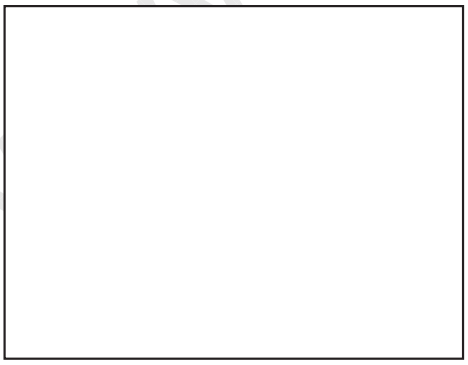

White Pattern

Black Pattern

< Permissive Power Input Ripple (V_{LCD}=12.0V, 25 ± 2°C,f_V=60Hz) **>**

One step solution for LCD / PDP / OLED panel application: Datasheet, inventory and accessory! www.panelook.com

Global LCD Panel Exchange Center www.panelook.com 屏库:全球液晶屏交易中心

Typical current pattern
(White : 255Gray, Black : 0Gray)

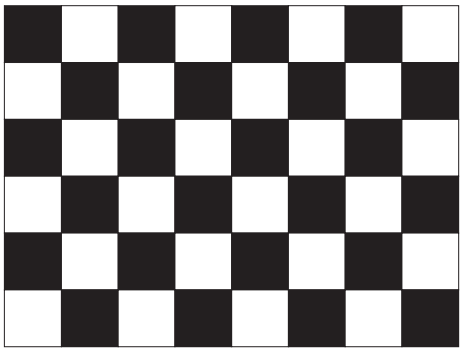

Mosaic Pattern(8 x 6)

Maximum current pattern

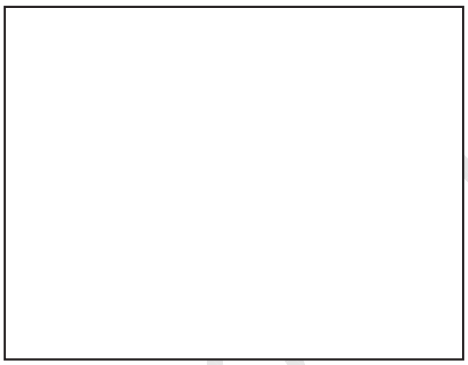

White Pattern

< Power consumption (V_{LCD}=12.0V, 25 ± 2°C,f_V=60Hz) **>**

www.panelook.com

One step solution for LCD / PDP / OLED panel application: Datasheet, inventory and accessory! www.panelook.com

Global LCD Panel Exchange Center www.panelook.com 屏库:全球液晶屏交易中心

Table 2-2. LED Bar ELECTRICAL CHARACTERISTICS

Parameter	Symbol	Values			Unit	Notes
		Min.	Typ.	Max.		
LED String Current	I_Green		90	95	mA	1, 2, 7
	I_Blue		55	58	mA	
Blue current Ratio	I_B / I_G	59.3	61.1	62.9	%	1,2,7,8
LED String Voltage	Vs_Green	(49.3)	(52.7)	(56.1)	V	1, 3, 7
	Vs_Blue	(49.3)	(52.7)	(56.1)	V	
Power Consumption	P_{Bar}		(30.6)	(32.5)	Watt	1,4,6,7
LED Life Time	LED_LT	30,000			Hrs	5, 7

LED driver design guide

1) The design of the LED driver must have specifications for the LED in LCD Assembly.
The performance of the LED in LCM, for example life time or brightness, is extremely influenced by the characteristics of the LED driver.
So all the parameters of an LED driver should be carefully designed and output current should be Constant current control. Please control feedback current of each string individually to compensate the current variation among the strings of LEDs.
When you design or order the LED driver, please make sure unwanted lighting caused by the mismatch of the LED and the LED driver (no lighting, flicker, etc) never occurs.
When you confirm it, the LCD module should be operated in the same condition as installed in your instrument.

Note :

1. Specified values are for a single LED bar.
2. The specified current is defined as the input current for a single LED string with 100% duty cycle
3. The specified voltage is input LED string and Bar voltage at typical Current 100% duty current.
4. The specified power consumption is input LED bar power consumption at typical Current 100% duty current.
5. The life is determined as the time at which luminance of the LED is 50% compared to that of initial value at the typical LED current on condition of continuous operating at 25 ± 2°C.
6. The power consumption shown above does not include loss of external driver.
The used LED bar current is the LED typical current.
The typical power consumption is calculated as
P_{Bar} = Vs(Typ.) x (I_green(Typ.)+I_blue(Typ)) x No. of strings.
The maximum power consumption is calculated as
P_{Bar} = Vs(Max.) x (I_green(Typ.)+I_blue(Typ)) x No. of strings
7. LED operating DC Forward Current must not exceed LED Max Ratings at 25±2 ° C
8. Blue current Ratio is calculated with I_B(typ.)/I_G(typ.) after 30min. aging time at 25 ± 2 ° C.
It means the Blue current portion comparing with Green current at 100% duty typical current.

One step solution for LCD / PDP / OLED panel application: Datasheet, inventory and accessory! www.panelook.com

Global LCD Panel Exchange Center www.panelook.com 屏库:全球液晶屏交易中心

3-2. Interface Connections

3-2-1. LCD Module

- LCD Connector(CN1). : FI-RE51S-HF (Manufactured by JAE) or equivalent
- Mating Connector: FI-RE51HL (Manufactured by JAE) or equivalent

Table 3 MODULE CONNECTOR(CN1) PIN CONFIGURATION

No	Symbol	Description	No	Symbol	Description
1	GND	Ground	27	GND	Ground
2	NC	Reserved	28	RE0N	SECOND CHANNEL 0-
3	ODC ON	ODC ON/OFF Control (H:ODC OFF, L:ODC ON)	29	RE0P	SECOND CHANNEL 0+
4	NC	(I2C DATA Interface)	30	RE1N	SECOND CHANNEL 1-
5	NC	(I2C CLK Interface)	31	RE1P	SECOND CHANNEL 1+
6	NC	Reserved	32	RE2N	SECOND CHANNEL 2-
7	NC	Reserved	33	RE2P	SECOND CHANNEL 2+
8	GND	Ground	34	GND	Ground
9	NC	NC	35	RECLKN	SECOND CLOCK CHANNEL C-
10	GND	Ground	36	RECLKP	SECOND CLOCK CHANNEL C+
11	GND	Ground	37	GND	Ground
12	RO0N	FIRST CHANNEL 0-	38	RE3N	SECOND CHANNEL 3-
13	RO0P	FIRST CHANNEL 0+	39	RE3P	SECOND CHANNEL 3+
14	RO1N	FIRST CHANNEL 1-	40	RE4N	SECOND CHANNEL 4-
15	RO1P	FIRST CHANNEL 1+	41	RE4P	SECOND CHANNEL 4+
16	RO2N	FIRST CHANNEL 2-	42	GND	Ground
17	RO2P	FIRST CHANNEL 2+	43	GND	Ground
18	GND	Ground	44	GND	Ground
19	ROCLKN	FIRST CLOCK CHANNEL C-	45	GND	Ground
20	ROCLKP	FIRST CLOCK CHANNEL C+	46	NC	NC
21	GND	Ground	47	NC	NC
22	RO3N	FIRST CHANNEL 3-	48	VLCD	Power Supply +12.0V
23	RO3P	FIRST CHANNEL 3+	49	VLCD	Power Supply +12.0V
24	RO4N	FIRST CHANNEL 4-	50	VLCD	Power Supply +12.0V
25	RO4P	FIRST CHANNEL 4+	51	VLCD	Power Supply +12.0V
26	GND	Ground	-	-	-

Note : 1. All GND(ground) pins should be connected together and should also be connected to the LCD's metal frame.
2. All VLCD (power input) pins should be connected together.
3. Input Level of LVDS signal is based on the EIA 664 Standard.

User Connector Diagram

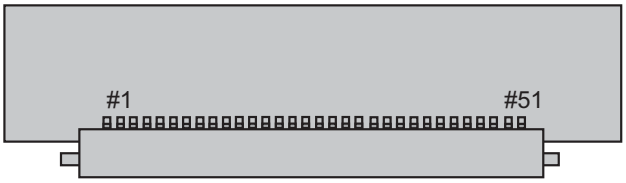

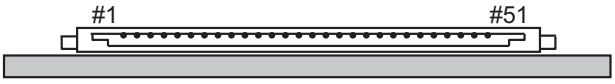

Rear view of LCM

One step solution for LCD / PDP / OLED panel application: Datasheet, inventory and accessory! www.panelook.com

Global LCD Panel Exchange Center www.panelook.com 屏库:全球液晶屏交易中心

Table 4. REQUIRED SIGNAL ASSIGNMENT FOR LVDS TRANSMITTER

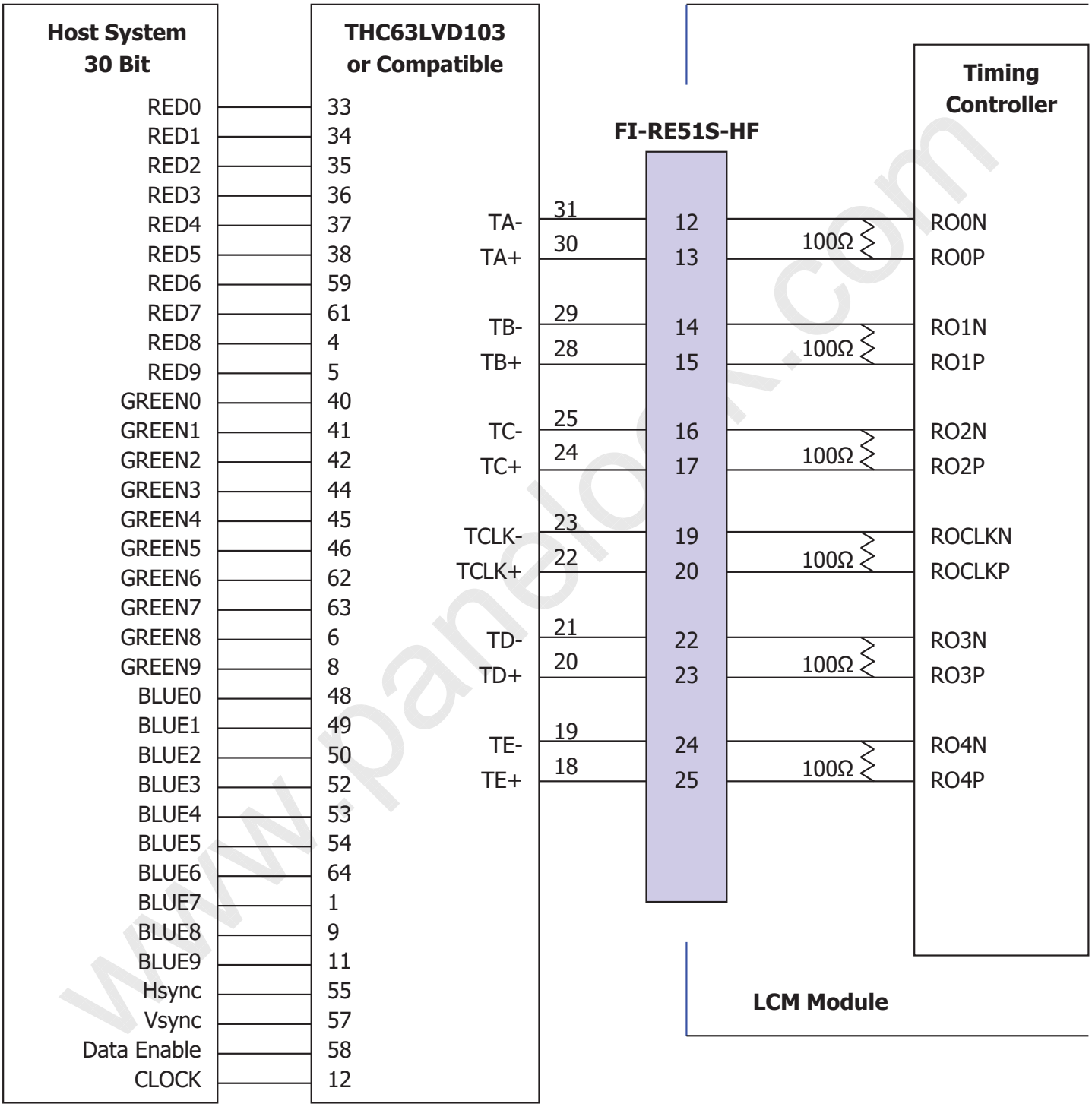

Note : 1. The LCD module uses a 100 Ohm[Ω] resistor between positive and negative lines of each receiver input.
2. Refer to LVDS Transmitter Data Sheet for detail descriptions. (THC63LVD103 or Compatible)
3. '9' means MSB and '0' means LSB at R,G,B pixel data.

One step solution for LCD / PDP / OLED panel application: Datasheet, inventory and accessory! www.panelook.com

Global LCD Panel Exchange Center www.panelook.com 屏库:全球液晶屏交易中心

LVDS Input characteristics

1. DC Specification

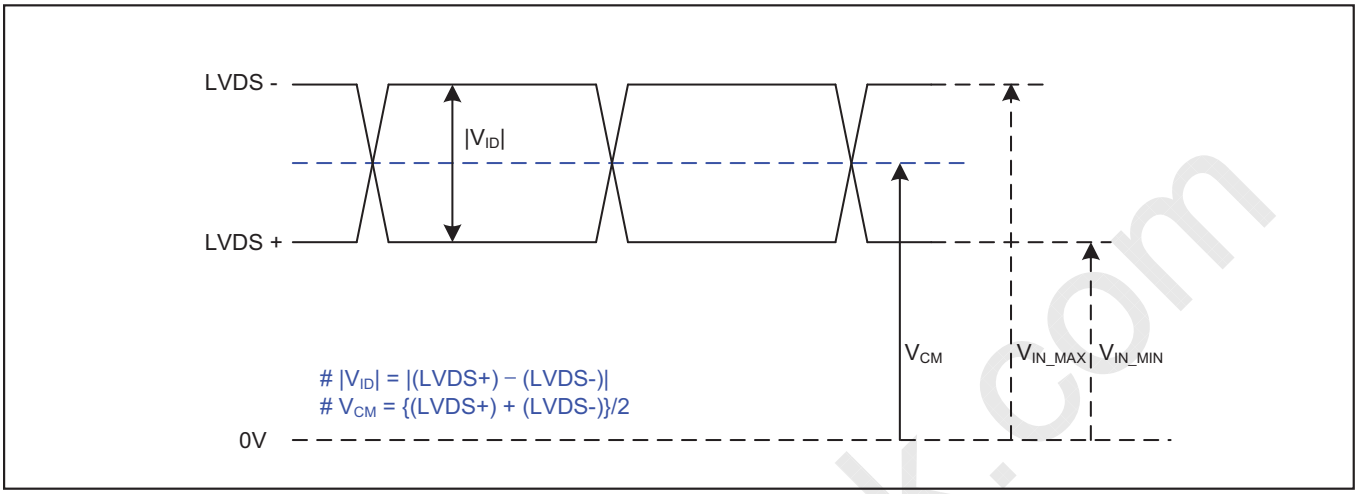

Description	Symbol	Min	Max	Unit	Notes
LVDS Differential Voltage	$\|V_{ID}\|$	200	600	mV	-
LVDS Common mode Voltage	V_{CM}	1.0	1.5	V	-
LVDS Input Voltage Range	V_{IN}	0.7	1.8	V	-

2. AC Specification

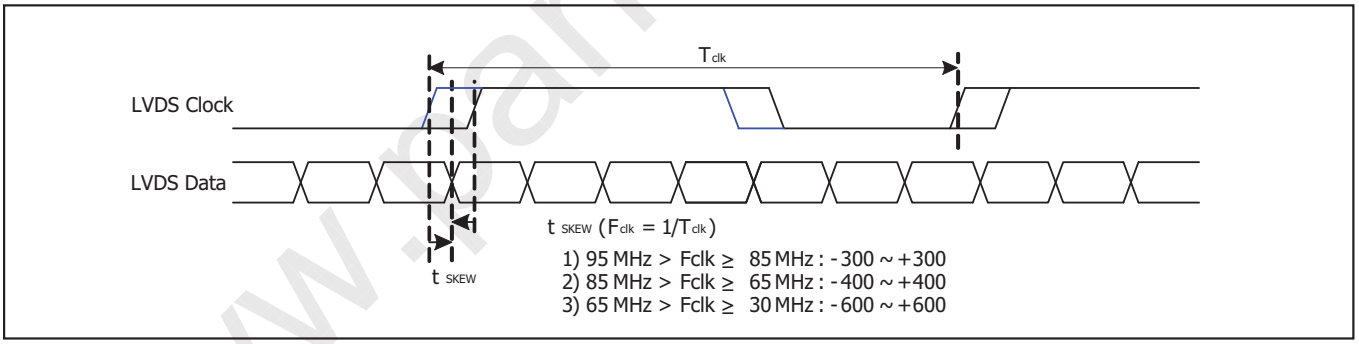

Description	Symbol	Min	Max	Unit	Notes
LVDS Clock to Data Skew Margin	t_{SKEW}	- 300	+ 300	ps	95MHz > Fclk ≥ 85MHz
	t_{SKEW}	- 400	+ 400	ps	85MHz > Fclk ≥ 65MHz
	t_{SKEW}	- 600	+ 600	ps	65MHz > Fclk ≥ 30MHz
LVDS Clock to Clock Skew Margin (Even to Odd)	t_{SKEW_EO}	- 1/7	+ 1/7	T_{clk}	-

One step solution for LCD / PDP / OLED panel application: Datasheet, inventory and accessory! www.panelook.com

Global LCD Panel Exchange Center www.panelook.com 屏库:全球液晶屏交易中心

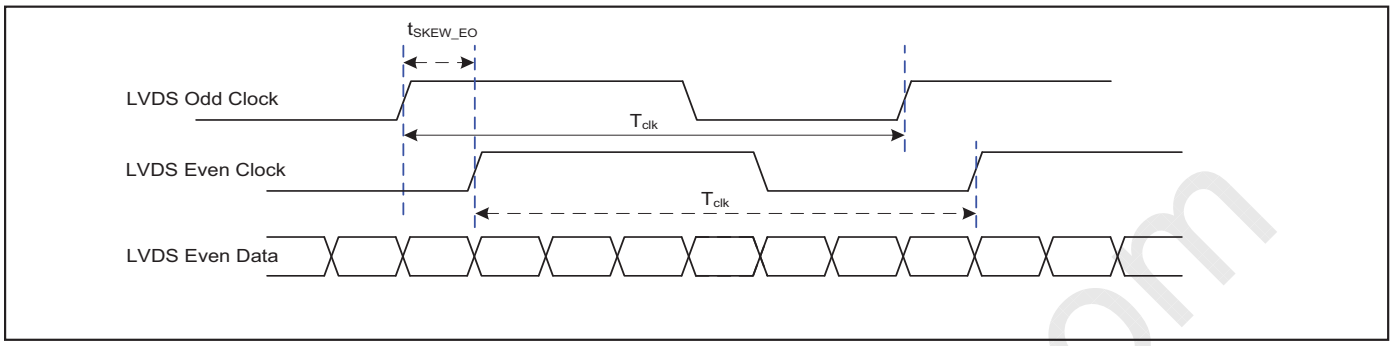

< Clock skew margin between channel >

3. Data Format

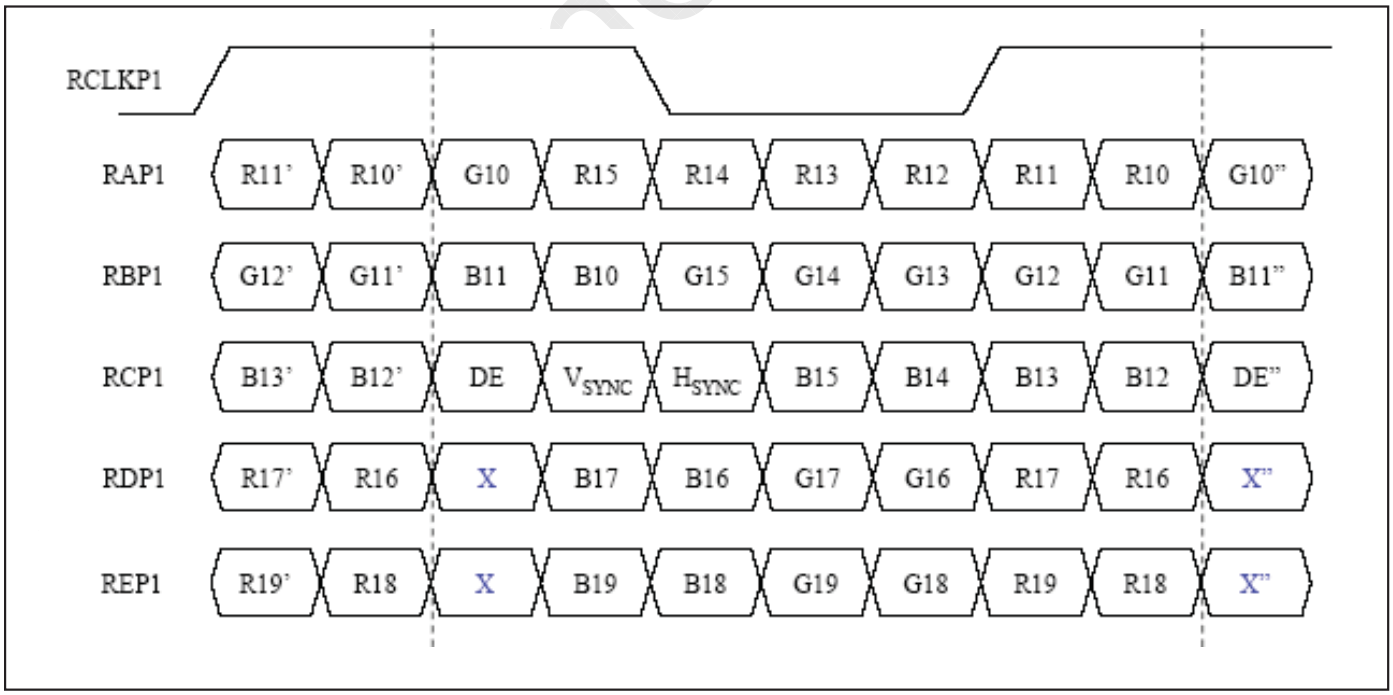

< LVDS Data Format >

One step solution for LCD / PDP / OLED panel application: Datasheet, inventory and accessory! www.panelook.com

Global LCD Panel Exchange Center www.panelook.com 屏库:全球液晶屏交易中心

3-2-2. Backlight Connector Pin Configuration(CN2)

- LED Connector : H401K-D12N-12B (Manufactured by E&T)
- Mating Connector : 4530K-F12N-01R (Manufactured by E&T) or Equivalent.

Table 3-3. LED CONNECTOR PIN CONFIGULATION

Pin No.	Symbol	Description	Note
1	G_1-	Green LED channel 1 Cathode	
2	G_2-	Green LED channel 2 Cathode	
3	G_+	Green Common Anode	
4	B_+	Blue Common Anode	
5	B_1-	Blue LED channel 1 Cathode	
6	B_2-	Blue LED channel 2 Cathode	
7	B_3-	Blue LED channel 3 Cathode	
8	B_4-	Blue LED channel 4 Cathode	
9	B_+	Blue Common Anode	
10	G_+	Green Common Anode	
11	G_3-	Green LED channel 3 Cathode	
12	G_4-	Green LED channel 4 Cathode	

Notes : 1. Green Common Anode Pin. No. 3 & 10 must be connected electrically for stable operation.
2. Blue Common Anode Pin. No. 4 & 9 must be connected electrically for stable operation.

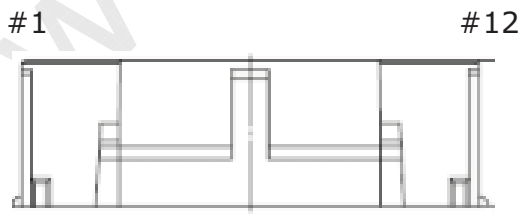

[Top view]

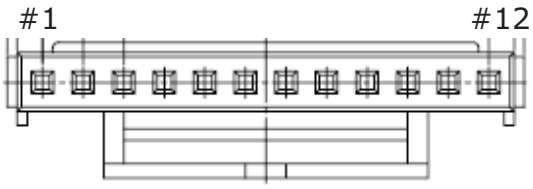

[Side view]

One step solution for LCD / PDP / OLED panel application: Datasheet, inventory and accessory! www.panelook.com

Global LCD Panel Exchange Center www.panelook.com 屏库:全球液晶屏交易中心

3-3. Signal Timing Specifications

This is signal timing required at the input of the TMDS transmitter. All of the interface signal timing should be satisfied with the following specifications for it's proper operation.

Table 5. TIMING TABLE (VESA COORDINATED VIDEO TIMING)

ITEM		SYMBOL	Min	Typ	Max	Unit	Note
DCLK	Period	t_{CLK}	12.82	12.98	13.16	ns	Pixel frequency : Typ. 154MHz
	Frequency	f_{CLK}	76	77	78	MHz	
Hsync	Period	t_{HP}	1036	1040	1044	t_{CLK}	
	Width-Active	t_{WH}	16	16	16		
Vsync	Period	t_{VP}	1233	1235	1237	t_{HP}	
	Frequency	f_V	58.85	59.95	61	Hz	
	Width-Active	t_{WV}	6	6	6	t_{HP}	
Data Enable	Horizontal Valid	t_{HV}	960	960	960	t_{CLK}	
	Horizontal Back Porch	t_{HBP}	36	40	44		
	Horizontal Front Porch	t_{HFP}	20	24	28		
	Horizontal Blank	-	76	80	84		t_{WH}+ t_{HBP}+ t_{HFP}
	Vertical Valid	t_{VV}	1200	1200	1200	t_{HP}	
	Vertical Back Porch	t_{VBP}	25	26	27		
	Vertical Front Porch	t_{VFP}	2	3	4		
	Vertical Blank	-	33	35	37		t_{WV}+ t_{VBP}+ t_{VFP}

Note: Hsync period and Hsync width-active should be even number times of t_{CLK}. If the value is odd number times of t_{CLK}, display control signal can be asynchronous. In order to operate this LCM a Hsync, Vsyn, and DE(data enable) signals should be used.

1. The performance of the electro-optical characteristics may be influenced by variance of the vertical refresh rates.
2. Vsync and Hsync should be keep the above specification.
3. Hsync Period, Hsync Width, and Horizontal Back Porch should be any times of of character number(8).
4. The polarity of Hsync, Vsync is not restricted.

One step solution for LCD / PDP / OLED panel application: Datasheet, inventory and accessory! www.panelook.com

Global LCD Panel Exchange Center www.panelook.com 屏库:全球液晶屏交易中心

3-4. Signal Timing Waveforms

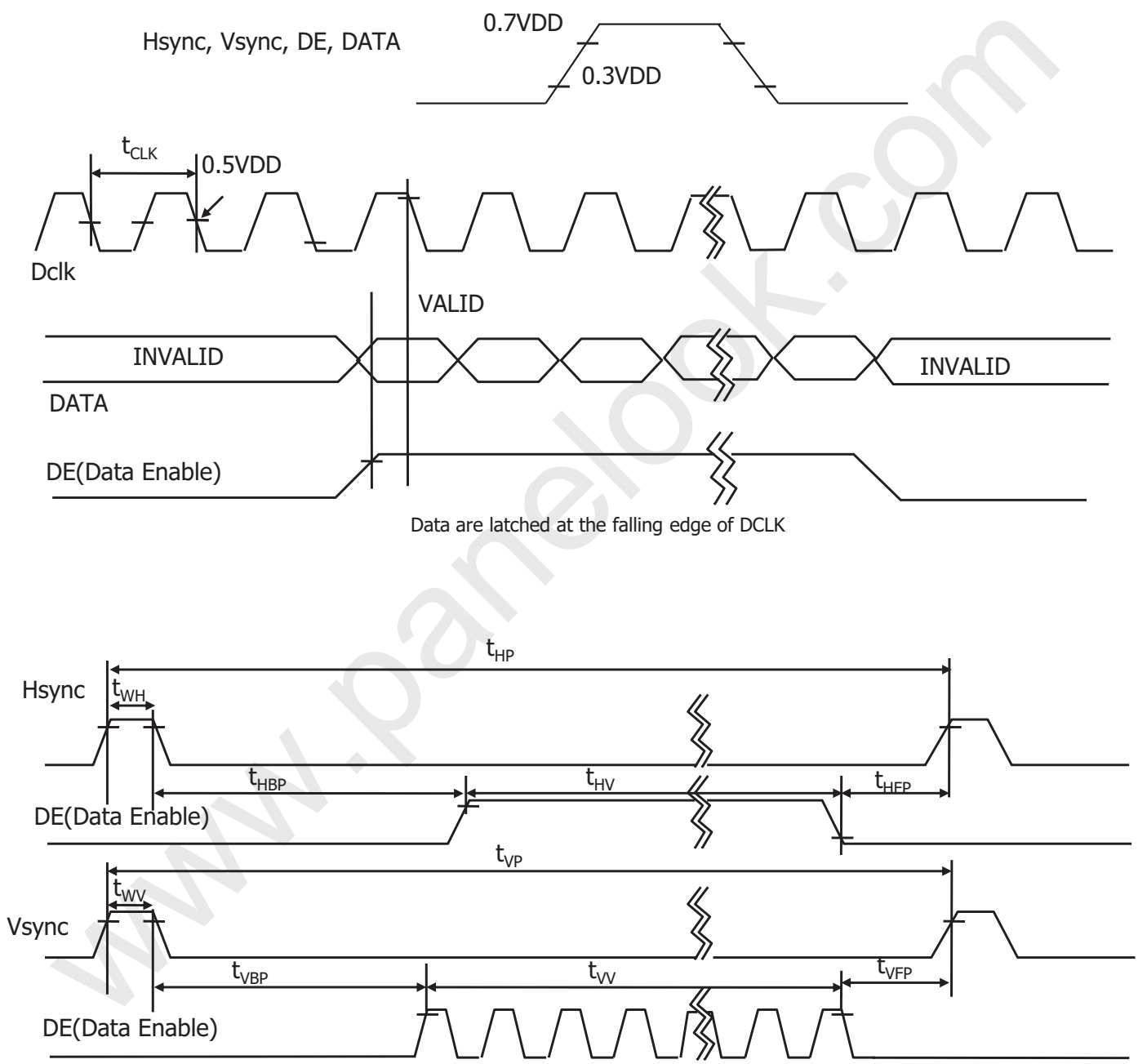

One step solution for LCD / PDP / OLED panel application: Datasheet, inventory and accessory! www.panelook.com

Global LCD Panel Exchange Center www.panelook.com 屏库:全球液晶屏交易中心

3-5. Color Input Data Reference

The Brightness of each primary color(red,green,blue) is based on the 10-bit gray scale data input for the color; the higher the binary input, the brighter the color. The table below provides a reference for color versus data input.

Table 6. COLOR DATA REFERENCE

Color		Input Color Data		
		RED MSB LSB	GREEN MSB LSB	BLUE MSB LSB
		R9 R8 R7 R6 R5 R4 R3 R2 R1 R0	G9 G8 G7 G6 G5 G4 G3 G2 G1 G0	B9 B8 B7 B6 B5 B4 B3 B2 B1 B0
Basic Color	Black	0 0 0 0 0 0 0 0 0 0	0 0 0 0 0 0 0 0 0 0	0 0 0 0 0 0 0 0 0 0
	Red (1023)	1 1 1 1 1 1 1 1 1 1	0 0 0 0 0 0 0 0 0 0	0 0 0 0 0 0 0 0 0 0
	Green (1023)	0 0 0 0 0 0 0 0 0 0	1 1 1 1 1 1 1 1 1 1	0 0 0 0 0 0 0 0 0 0
	Blue (1023)	0 0 0 0 0 0 0 0 0 0	0 0 0 0 0 0 0 0 0 0	1 1 1 1 1 1 1 1 1 1
	Cyan	0 0 0 0 0 0 0 0 0 0	1 1 1 1 1 1 1 1 1 1	1 1 1 1 1 1 1 1 1 1
	Magenta	1 1 1 1 1 1 1 1 1 1	0 0 0 0 0 0 0 0 0 0	1 1 1 1 1 1 1 1 1 1
	Yellow	1 1 1 1 1 1 1 1 1 1	1 1 1 1 1 1 1 1 1 1	0 0 0 0 0 0 0 0 0 0
	White	1 1 1 1 1 1 1 1 1 1	1 1 1 1 1 1 1 1 1 1	1 1 1 1 1 1 1 1 1 1
RED	RED (000)	0 0 0 0 0 0 0 0 0 0	0 0 0 0 0 0 0 0 0 0	0 0 0 0 0 0 0 0 0 0
	RED (001)	0 0 0 0 0 0 0 0 0 1	0 0 0 0 0 0 0 0 0 0	0 0 0 0 0 0 0 0 0 0
	...	...	...	...
	RED (1022)	1 1 1 1 1 1 1 1 1 0	0 0 0 0 0 0 0 0 0 0	0 0 0 0 0 0 0 0 0 0
	RED (1023)	1 1 1 1 1 1 1 1 1 1	0 0 0 0 0 0 0 0 0 0	0 0 0 0 0 0 0 0 0 0
GREEN	GREEN (000)	0 0 0 0 0 0 0 0 0 0	0 0 0 0 0 0 0 0 0 0	0 0 0 0 0 0 0 0 0 0
	GREEN (001)	0 0 0 0 0 0 0 0 0 0	0 0 0 0 0 0 0 0 0 1	0 0 0 0 0 0 0 0 0 0
	...	...	...	...
	GREEN (1022)	0 0 0 0 0 0 0 0 0 0	1 1 1 1 1 1 1 1 1 0	0 0 0 0 0 0 0 0 0 0
	GREEN (1023)	0 0 0 0 0 0 0 0 0 0	1 1 1 1 1 1 1 1 1 1	0 0 0 0 0 0 0 0 0 0
BLUE	BLUE (000)	0 0 0 0 0 0 0 0 0 0	0 0 0 0 0 0 0 0 0 0	0 0 0 0 0 0 0 0 0 0
	BLUE (001)	0 0 0 0 0 0 0 0 0 0	0 0 0 0 0 0 0 0 0 0	0 0 0 0 0 0 0 0 0 1
	...	...	...	...
	BLUE (1022)	0 0 0 0 0 0 0 0 0 0	0 0 0 0 0 0 0 0 0 0	1 1 1 1 1 1 1 1 1 0
	BLUE (1023)	0 0 0 0 0 0 0 0 0 0	0 0 0 0 0 0 0 0 0 0	1 1 1 1 1 1 1 1 1 1

www.panelook.com

One step solution for LCD / PDP / OLED panel application: Datasheet, inventory and accessory! www.panelook.com

Global LCD Panel Exchange Center www.panelook.com 屏库:全球液晶屏交易中心

3-6. Power Sequence

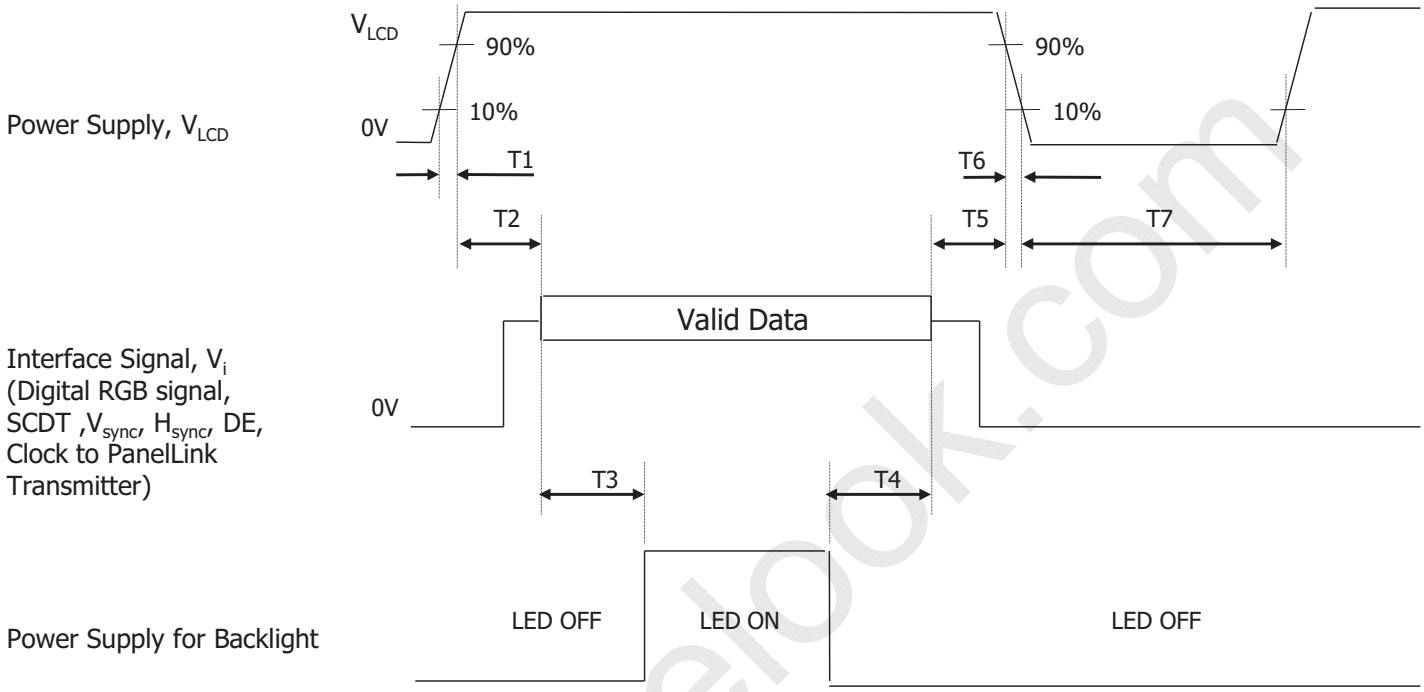

Table 7. POWER SEQUENCE

Parameter	Values			Units
	Min	Typ	Max	
T1	0.5	-	10	ms
T2	0.5	-	50	ms
T3	500	-	-	ms
T4	200	-	-	ms
T5	0.01	-	50	ms
T7	1000		-	ms

Notes : 1. Please avoid floating state of interface signal at invalid period.
2. When the interface signal is invalid, be sure to pull down the power supply for LCD V_{LCD} to 0V.
3. LED power must be turn on after power supply for LCD and interface signal are valid.

One step solution for LCD / PDP / OLED panel application: Datasheet, inventory and accessory! www.panelook.com

Global LCD Panel Exchange Center www.panelook.com 屏库:全球液晶屏交易中心

3-7. V_{LCD} Power Dip Condition

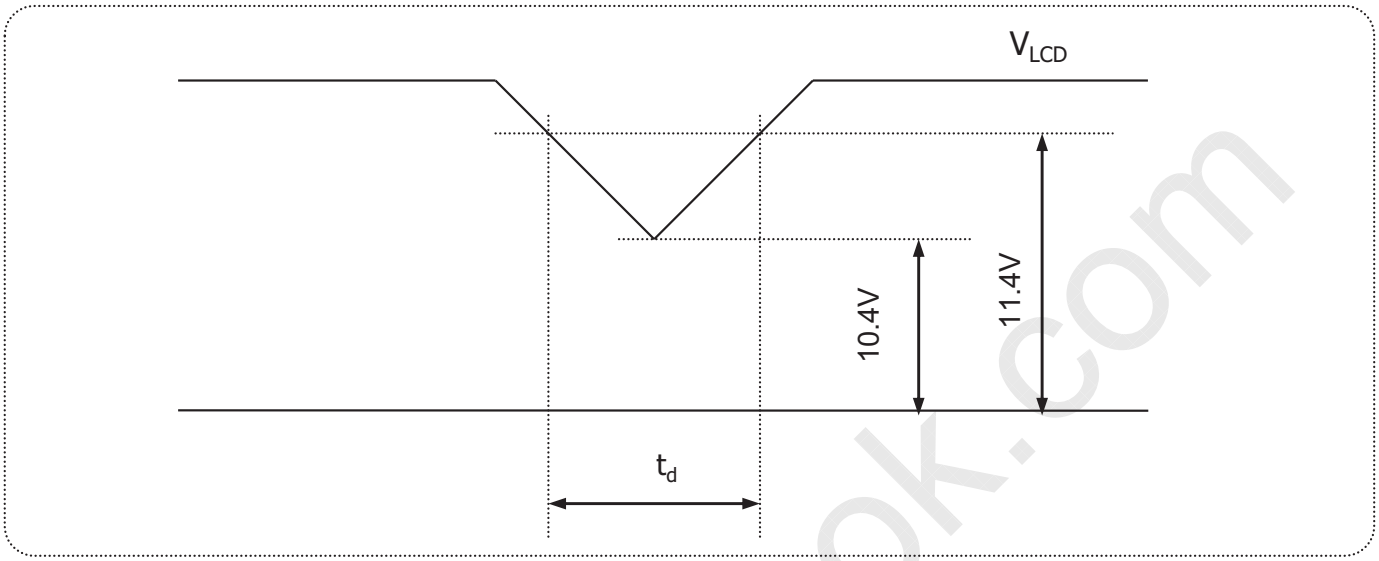

FIG.6 Power dip condition

1) Dip condition

$10.4V \leq V_{LCD} < 11.4V$, $t_d \leq 20ms$

2) $V_{LCD} < 10.4V$

V_{LCD}-dip conditions should also follow the Power On/Off conditions for supply voltage.

www.panelook.com

One step solution for LCD / PDP / OLED panel application: Datasheet, inventory and accessory! www.panelook.com

Global LCD Panel Exchange Center www.panelook.com 屏库:全球液晶屏交易中心

4. Optical Specifications

Optical characteristics are determined after the unit has been 'ON' for approximately 30 minutes in a dark environment at 25±2°C. The values specified are at an approximate distance 50cm from the LCD surface at a viewing angle of Φ and θ equal to 0 ° and aperture 1 degree.
FIG. 1 presents additional information concerning the measurement equipment and method.

Table 9. OPTICAL CHARACTERISTICS

(Ta=25 °C, V_{LCD}=12.0V, f_V=60Hz Dclk=154MHz I_{BL}=G90mA/B55mA)

Parameter		Symbol	Values			Units	Notes
			Min	Typ	Max		
Contrast Ratio		CR	700	1000			1
Surface Luminance, white		L_{WH}	280	350		cd/m²	2
Luminance Variation		δ_{WHITE}	75			%	3
Response Time	Gray to Gray	T_{GTG_AVR}	-	6	12	ms	4
Color Coordinates [CIE1931]	RED	Rx	Typ -0.03	(0.680)	Typ +0.03		
		Ry		(0.310)			
	GREEN	Gx		(0.210)			
		Gy		(0.700)			
	BLUE	Bx		(0.147)			
		By		(0.054)			
	WHITE	Wx		(0.313)			
		Wy		(0.329)			
Color Coordinates [CIE1976]	RED	Ru'	-	(0.507)	-		
		Rv'		(0.521)			
	GREEN	Gu'		(0.077)			
		Gv'		(0.573)			
	BLUE	Bu'		(0.175)			
		Bv'		(0.145)			
	WHITE	Wu'		(0.198)			
		Wv'		(0.468)			
Color Shift	Horizontal	θ_{CST_H}	-	178	-	Degree	5
	Vertical	θ_{CST_V}	-	178	-		
Viewing Angle (CR>10)							
General	Horizontal	θ_H	170	178	-	Degree	6
	Vertical	θ_V	170	178	-		
Effective	Horizontal	θ_{GMA_H}		178	-	Degree	7
	Vertical	θ_{GMA_V}		178	-		
Gray Scale				2.2			8

One step solution for LCD / PDP / OLED panel application: Datasheet, inventory and accessory! www.panelook.com

Global LCD Panel Exchange Center www.panelook.com 屏库:全球液晶屏交易中心

Notes 1. Contrast Ratio(CR) is defined mathematically as : ***(By PR880)***

$$\text{Contrast Ratio} = \frac{\text{Surface Luminance with all white pixels}}{\text{Surface Luminance with all black pixels}}$$

It is measured at center point(Location P1)

2. Surface luminance(L_{WH})is luminance value at 1 point(1) across the LCD surface 50cm from the surface with all pixels displaying white. For more information see FIG 2.

3. The variation in surface luminance , δ WHITE is defined as : ***(By PR880)***

$$\delta_{WHITE} = \frac{\text{Minimum}(L_{P1}, L_{P2}, \ldots L_{P9})}{\text{Maximum}(L_{P1}, L_{P2}, \ldots L_{P9})} \times 100$$

Where L1 to L9 are the luminance with all pixels displaying white at 9 locations.
For more information see FIG 2.

4. Gray to gray response time is the time required for the display to transition from gray to gray. For additional information see Table 10. ***(By RD80)***

5. Color shift is the angle at which the color difference is lower than 0.04.
For more information see FIG 3. ***(By EZ Contrast)***
- Color difference (Δu'v')

$$u' = \frac{4x}{-2x+12y+3} \qquad v' = \frac{9y}{-2x+12y+3}$$

$$\Delta u'v' = \sqrt{(u'_1 - u'_2)^2 + (v'_1 - v'_2)^2}$$

u'1, v'1 : u'v' value at viewing angle direction
u'2, v'2 : u'v' value at front (θ=0)

- Pattern size : 25% Box size
- Viewing angle direction of color shift : Horizontal, Vertical

6. Viewing angle is the angle at which the contrast ratio is greater than 10. The angles are determined for the horizontal or x axis and the vertical or y axis with respect to the z axis which is normal to the LCD surface. For more information see FIG 4. ***(By PR880)***

7. Effective viewing angle is the angle at which the gamma shift of gray scale is lower than 0.3.
For more information see FIG 5 and FIG 6.

8. Gray scale specification
Gamma Value is approximately 2.2. For more information see Table 11.

One step solution for LCD / PDP / OLED panel application: Datasheet, inventory and accessory! www.panelook.com

Global LCD Panel Exchange Center www.panelook.com 屏库:全球液晶屏交易中心

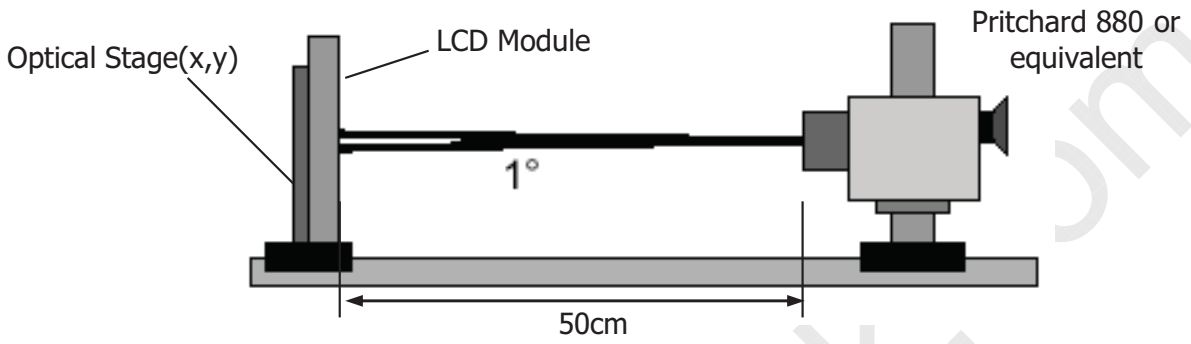

FIG. 1 Optical Characteristic Measurement Equipment and Method

Measuring point for surface luminance & measuring point for luminance variation.

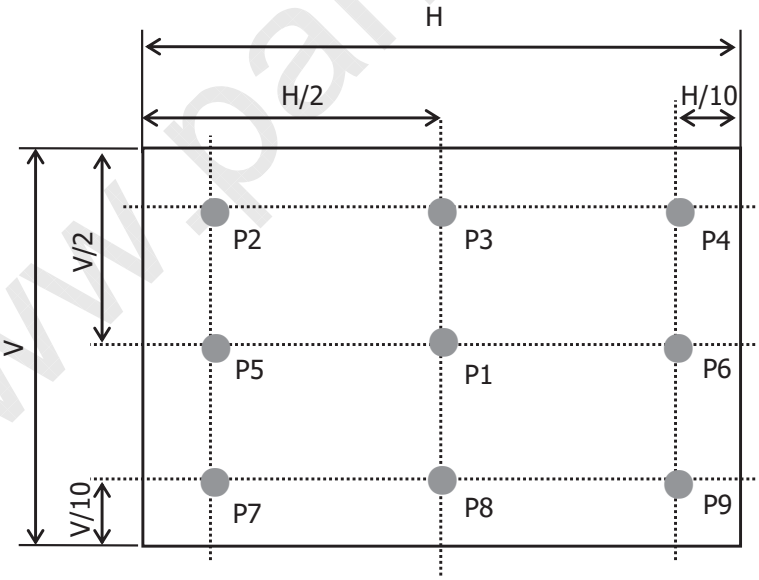

H : 518.4 mm
V : 324.0 mm

FIG. 2 Measure Point for Luminance

One step solution for LCD / PDP / OLED panel application: Datasheet, inventory and accessory! www.panelook.com

Global LCD Panel Exchange Center www.panelook.com 屏库:全球液晶屏交易中心

The gray to gray response time is defined as the following figure and shall be measured by switching the input signal for "Gray To Gray".

- Gray step : 5 step
- T_{GTG_AVR} is the total average time at rising time and falling time for "Gray To Gray".
- T_{GTG_MAX} is the max time at rising time or falling time for "Gray To Gray".
- In case of the difference in measured values due to the difference of measuring device or program was found, correlated value will be used after discussions between both parties.

Table 10. Gray to gray response time table

Gray to Gray		Rising Time				
		G1023	G767	G511	G255	G0
Falling Time	G1023					
	G767					
	G511					
	G255					
	G0					

Color shift is defined as the following test pattern and color.

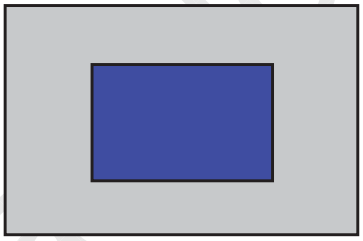

25% Box size

FIG. 3 Color Shift Test Pattern

Average RGB values in Bruce RGB for Macbeth Chart

	Dark skin	Light skin	Blue sky	Foliage	Blue flower	Bluish green
R	395	827	343	311	519	459
G	227	571	451	411	475	799
B	183	495	647	187	743	715
	Orange	Purplish blue	Moderate red	Purple	Yellow green	Orange yellow
R	879	227	847	307	643	923
G	419	279	271	159	775	651
B	99	699	351	347	235	119
	Blue	Green	Red	Yellow	Magenta	cyan
R	107	291	791	967	831	143
G	131	595	111	851	251	507
B	583	263	151	147	607	691
	White	Neutral 8	Neutral 6.5	Neutral 5	Neutral 3.5	black
R	963	827	623	443	255	91
G	963	827	623	443	255	91
B	963	827	623	443	255	91

One step solution for LCD / PDP / OLED panel application: Datasheet, inventory and accessory! www.panelook.com

Global LCD Panel Exchange Center www.panelook.com 屏库:全球液晶屏交易中心

Dimension of viewing angle range.

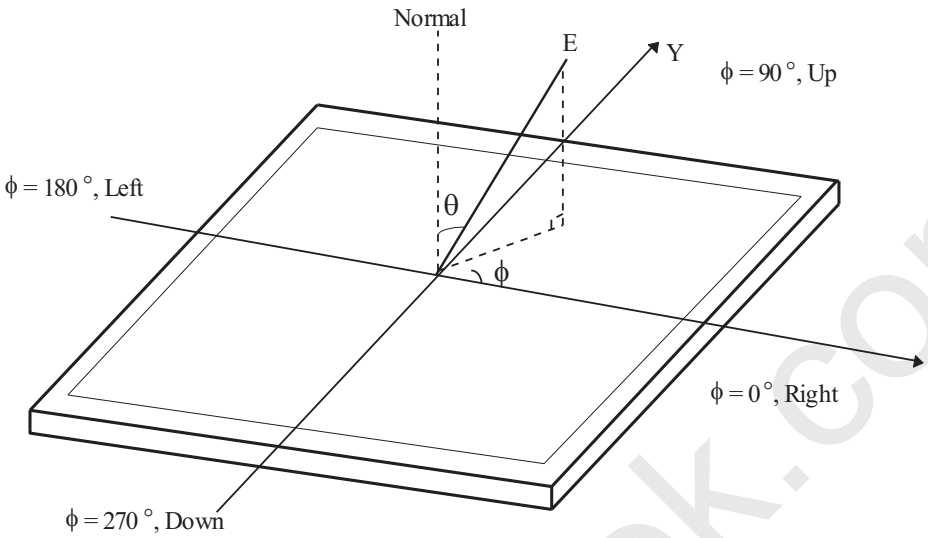

FIG. 4 Viewing angle

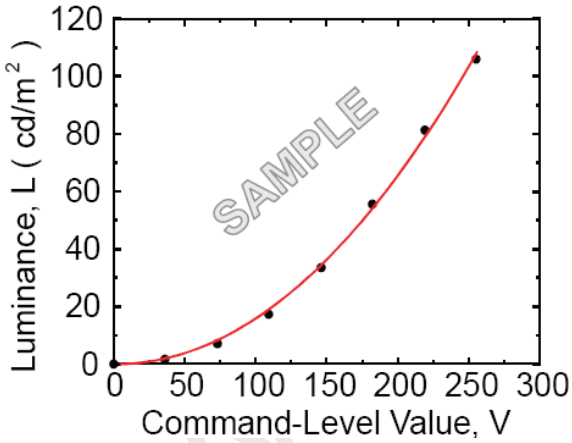

FIG. 5 Sample Luminance vs. gray scale (using a 256 bit gray scale)

$$L = aV^{r} + L_b$$

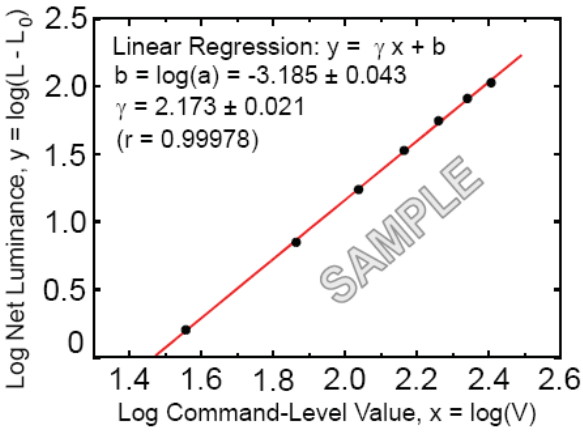

FIG. 6 Sample Log-log plot of luminance vs. gray scale

$$\log(L - L_b) = r\log(V) + \log(a)$$

Here the Parameter α and γ relate the signal level V to the luminance L.

The GAMMA we calculate from the log-log representation (FIG. 6)

One step solution for LCD / PDP / OLED panel application: Datasheet, inventory and accessory! www.panelook.com

Global LCD Panel Exchange Center www.panelook.com 屏库:全球液晶屏交易中心

Table 11. Gray Scale Specification

Gray Level	Relative Luminance [%] (Typ.)
0	0.10
63	0.30
127	1.08
191	2.50
255	4.71
319	7.70
383	11.52
447	16.18
511	21.72
575	28.15
639	35.51
703	43.81
767	53.07
831	63.30
895	74.52
959	86.75
1023	100

www.panelook.com

One step solution for LCD / PDP / OLED panel application: Datasheet, inventory and accessory! www.panelook.com

Global LCD Panel Exchange Center www.panelook.com 屏库:全球液晶屏交易中心

5. Mechanical Characteristics

The contents provide general mechanical characteristics. In addition the figures in the next page are detailed mechanical drawing of the LCD.

Outline Dimension	Horizontal	546.4mm
	Vertical	352.0mm
	Depth	15.5mm
Bezel Area	Horizontal	522.4mm
	Vertical	328.0mm
Active Display Area	Horizontal	518.4mm
	Vertical	324.0mm
Weight	2450 g(Typ) / 2575 g(Max)	
Surface Treatment	Hard coating(3H) Anti-glare treatment of the front polarizer	

Notes : Please refer to a mechanic drawing in terms of tolerance at the next page.

www.panelook.com

One step solution for LCD / PDP / OLED panel application: Datasheet, inventory and accessory! www.panelook.com

Global LCD Panel Exchange Center www.panelook.com 屏库:全球液晶屏交易中心

<FRONT VIEW>

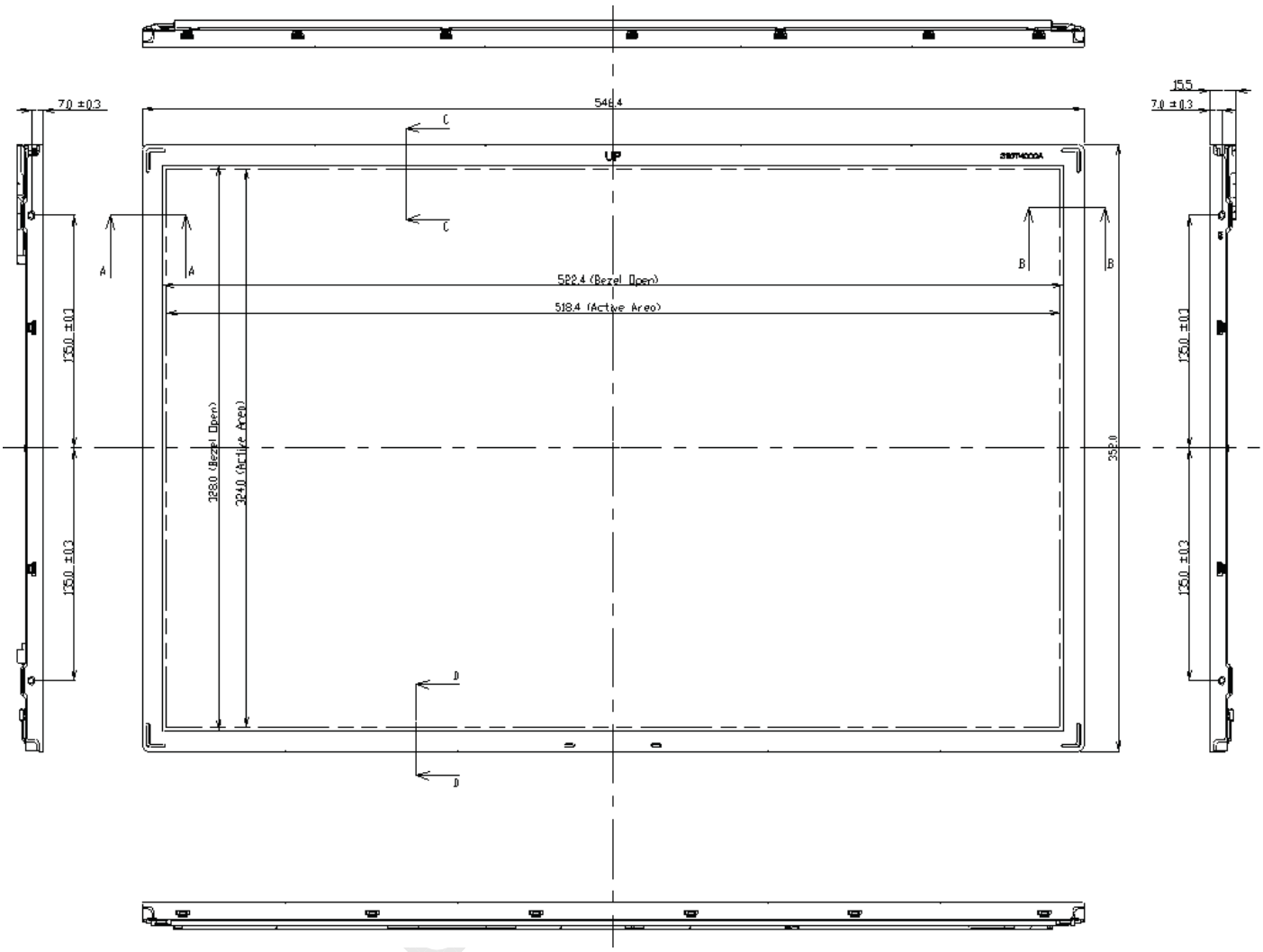

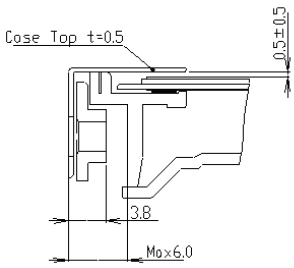

SECTION A-A
SCALE 2/1

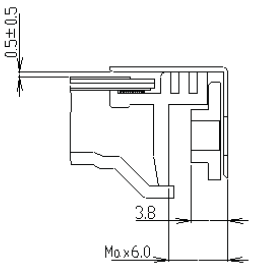

SECTION B-B
SCALE 2/1

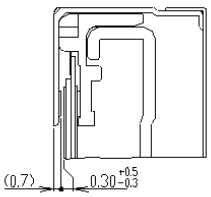

SECTION C-C
SCALE 2/1

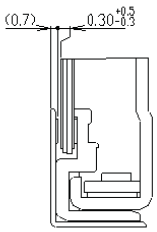

SECTION D-D
SCALE 2/1

One step solution for LCD / PDP / OLED panel application: Datasheet, inventory and accessory! www.panelook.com

Global LCD Panel Exchange Center www.panelook.com 屏库:全球液晶屏交易中心

<REAR VIEW>

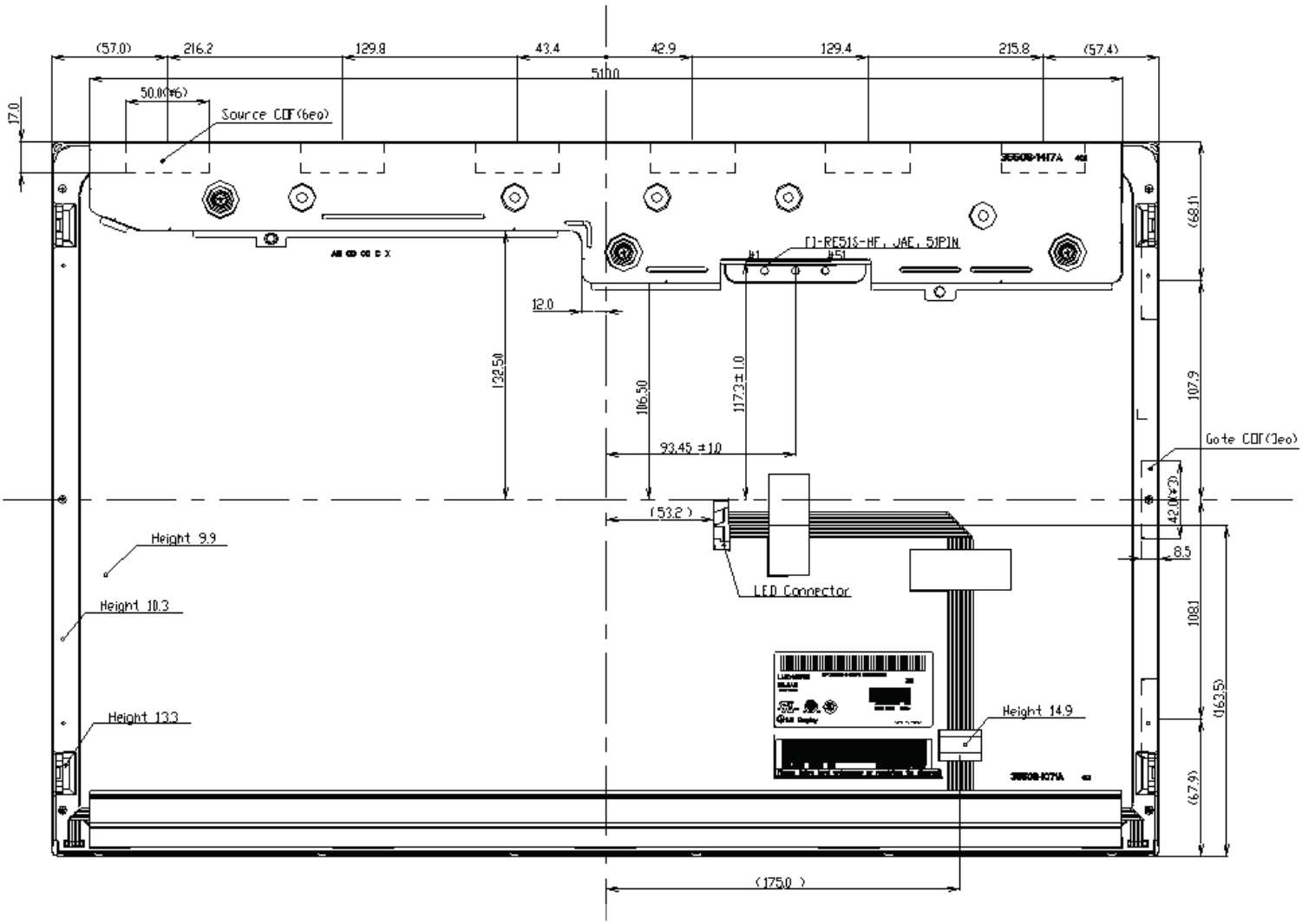

Notes

1. I/F Connector Specification
   -FI-RE51S-HF, JAE, 51PIN
2. LED Connector Specification
   -E&T, H401K-D12N-12B
3. Torque of user hole: 2.5~3.5kgf-cm.
4. Tilt and partial disposition tolerance of display area as following
   (1) Y-direction : |A-B| ≦ 1.4
   (2) X-direction : |C-D| ≦ 1.4

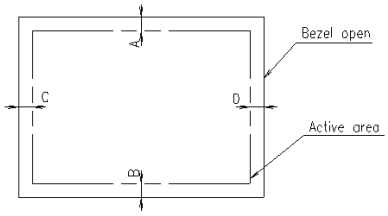

5. Unspecified tolerances to be ± 0.5mm
6. The COF area is weak & sensive, so please don't press the COF area

One step solution for LCD / PDP / OLED panel application: Datasheet, inventory and accessory! www.panelook.com

Global LCD Panel Exchange Center www.panelook.com 屏库:全球液晶屏交易中心

6. Reliability

Environment test condition

No	Test Item	Condition
1	High temperature storage test	Ta= 60°C 240h
2	Low temperature storage test	Ta= -20°C 240h
3	High temperature operation test	Ta= 50°C 50%RH 240h
4	Low temperature operation test	Ta= 0°C 240h
5	Vibration test (non-operating)	Wave form : random Vibration level : 1.0G RMS Bandwidth : 10-300Hz Duration : X,Y,Z, 10 min One time each direction
6	Shock test (non-operating)	Shock level : 100G Waveform : half sine wave, 2ms Direction : ±X, ±Y, ±Z One time each direction
7	Humidity condition Operation	Ta= 40 °C ,90%RH
8	Altitude operating storage / shipment	 0 - 16,000 feet(4,876m) 0 - 40,000 feet(12,192m)
9	Maximum Storage Humidity for 4 corner light leakage Mura.	Max 70%RH , Ta=40℃

One step solution for LCD / PDP / OLED panel application: Datasheet, inventory and accessory! www.panelook.com

Global LCD Panel Exchange Center www.panelook.com 屏库:全球液晶屏交易中心

7. International Standards

7-1. Safety

a) UL 60950-1, Underwriters Laboratories Inc.
Information Technology Equipment - Safety - Part 1 : General Requirements.

b) CAN/CSA C22.2 No.60950-1-07, Canadian Standards Association.
Information Technology Equipment - Safety - Part 1 : General Requirements.

c) EN 60950-1, European Committee for Electrotechnical Standardization (CENELEC).
Information Technology Equipment - Safety - Part 1 : General Requirements.

d) IEC 60950-1, The International Electrotechnical Commission (IEC).
Information Technology Equipment - Safety - Part 1 : General Requirements.
(Including report of IEC60825-1:2001 clause 8 and clause 9)

Notes

1. Laser (LED Backlight) Information

Class 1M LED Product IEC60825-1 : 2001 Embedded LED Power (Class1M)

2. Caution
: LED inside.
Class 1M laser (LEDs) radiation when open.
Do not open while operating.

7-2. EMC

a) ANSI C63.4 "American National Standard for Methods of Measurement of Radio-Noise Emissions from Low-Voltage Electrical and Electronic Equipment in the Range of 9 kHz to 40 GHz." American National Standards Institute (ANSI), 2003.

b) CISPR 22 "Information technology equipment – Radio disturbance characteristics – Limit and methods of measurement." International Special Committee on Radio Interference (CISPR), 2005.

c) CISPR 13 "Sound and television broadcast receivers and associated equipment – Radio disturbance characteristics – Limits and method of measurement." International Special Committee on Radio Interference (CISPR), 2006.

7-3. Environment

a) RoHS. Directive 2002/95/EC of the European Parliament and of the Council on the reduction of the use of certain hazardous substances in electrical and electronic equipment. January 2003

One step solution for LCD / PDP / OLED panel application: Datasheet, inventory and accessory! www.panelook.com

Global LCD Panel Exchange Center www.panelook.com 屏库:全球液晶屏交易中心

8. Packing

8-1. Designation of Lot Mark

a) Lot Mark

A	B	C	D	E	F	G	H	I	J	K	L	M

A,B,C : SIZE(INCH)
E : MONTH
D : YEAR
F ~ M : SERIAL NO.

Note

1. YEAR

Year	2011	2012	2013	2014	2015	2016	2017	2018	2019	2020
Mark	A	B	C	D	E	F	G	H	J	K

2. Month

Month	Jan	Feb	Mar	Apr	May	Jun	Jul	Aug	Sep	Oct	Nov	Dec
Mark	1	2	3	4	5	6	7	8	9	A	B	C

b) Location of Lot Mark

Serial No. is printed on the label. The label is attached to the backside of the LCD module.
This is subject to change without prior notice.

8-2. Packing Form

a) Package quantity in one box : 8 EA

b) Box Size : 355 X 408 X 600

One step solution for LCD / PDP / OLED panel application: Datasheet, inventory and accessory! www.panelook.com

Global LCD Panel Exchange Center www.panelook.com 屏库:全球液晶屏交易中心

9. PRECAUTIONS

Please pay attention to the followings when you use this TFT LCD module.

9-1. MOUNTING PRECAUTIONS

(1) You must mount a module using holes arranged in four corners or four sides.
(2) You should consider the mounting structure so that uneven force (ex. Twisted stress) is not applied to the module. And the case on which a module is mounted should have sufficient strength so that external force is not transmitted directly to the module.
(3) Please attach the surface transparent protective plate to the surface in order to protect the polarizer. Transparent protective plate should have sufficient strength in order to the resist external force.
(4) You should adopt radiation structure to satisfy the temperature specification.
(5) Acetic acid type and chlorine type materials for the cover case are not desirable because the former generates corrosive gas of attacking the polarizer at high temperature and the latter causes circuit break by electro-chemical reaction.
(6) Do not touch, push or rub the exposed polarizers with glass, tweezers or anything harder than HB pencil lead. And please do not rub with dust clothes with chemical treatment.
Do not touch the surface of polarizer for bare hand or greasy cloth.(Some cosmetics are detrimental to the polarizer.)
(7) When the surface becomes dusty, please wipe gently with absorbent cotton or other soft materials like chamois soaks with petroleum benzene. Normal-hexane is recommended for cleaning the adhesives used to attach front / rear polarizers. Do not use acetone, toluene and alcohol because they cause chemical damage to the polarizer.
(8) Wipe off saliva or water drops as soon as possible. Their long time contact with polarizer causes deformations and color fading.
(9) Do not open the case because inside circuits do not have sufficient strength.
(10) As The IPS panel is sensitive & slim, please recommend the metal frame of the system supports the panel by the double side-mount.

9-2. OPERATING PRECAUTIONS

(1) The spike noise causes the mis-operation of circuits. It should be lower than following voltage :
V=±200mV(Over and under shoot voltage)
(2) Response time depends on the temperature.(In lower temperature, it becomes longer.)
(3) Brightness depends on the temperature. (In higher temperature, it becomes lower.)
And in lower temperature, response time(required time that brightness is stable after turned on) becomes longer.
(4) Be careful for condensation at sudden temperature change. Condensation makes damage to polarizer or electrical contacted parts. And after fading condensation, smear or spot will occur.
(5) When fixed patterns are displayed for a long time, remnant image is likely to occur.
(6) Module has high frequency circuits. Sufficient suppression to the electromagnetic interference shall be done by system manufacturers. Grounding and shielding methods may be important to minimized the interference.
(7) Please do not give any mechanical and/or acoustical impact to LCM. Otherwise, LCM can't be operated its full characteristics perfectly.
(8) A screw which is fastened up the steels should be a machine screw.
(if not, it causes metallic foreign material and deal LCM a fatal blow)
(9) Please do not set LCD on its edge.
(10) When LCMs are used for public display defects such as Yogure, image sticking can not be guarantee
(11) LCMs cannot support "Interlaced Scan Method"

One step solution for LCD / PDP / OLED panel application: Datasheet, inventory and accessory! www.panelook.com

Global LCD Panel Exchange Center www.panelook.com 屏库:全球液晶屏交易中心

9-3. ELECTROSTATIC DISCHARGE CONTROL

Since a module is composed of electronic circuits, it is not strong to electrostatic discharge. Make certain that treatment persons are connected to ground through wrist band etc. And don't touch interface pin directly.

9-4. PRECAUTIONS FOR STRONG LIGHT EXPOSURE

Strong light exposure causes degradation of polarizer and color filter.

9-5. STORAGE

When storing modules as spares for a long time, the following precautions are necessary.

(1) Store them in a dark place. Do not expose the module to sunlight or fluorescent light. Keep the temperature between 5°C and 35°C at normal humidity.
(2) The polarizer surface should not come in contact with any other object.
It is recommended that they be stored in the container in which they were shipped.

9-6. HANDLING PRECAUTIONS FOR PROTECTION FILM

(1) The protection film is attached to the bezel with a small masking tape.
When the protection film is peeled off, static electricity is generated between the film and polarizer.
This should be peeled off slowly and carefully by people who are electrically grounded and with well ion-blown equipment or in such a condition, etc.
(2) When the module with protection film attached is stored for a long time, sometimes there remains a very small amount of glue still on the bezel after the protection film is peeled off.
(3) You can remove the glue easily. When the glue remains on the bezel surface or its vestige is recognized, please wipe them off with absorbent cotton waste or other soft material like chamois soaked with normal-hexane.

One step solution for LCD / PDP / OLED panel application: Datasheet, inventory and accessory! www.panelook.com